# **INSTALLATION** MANUAL

38150A

ecolight | UGR19 | 90 CRI | CE | RoHS COMPLIANT | NOT DIMMABLE

**40W** | LED | **230V** | **IP20** | Aluminium
Complete with 1000mA driver.

one LIGHT

## A SURFACE INSTALLATION

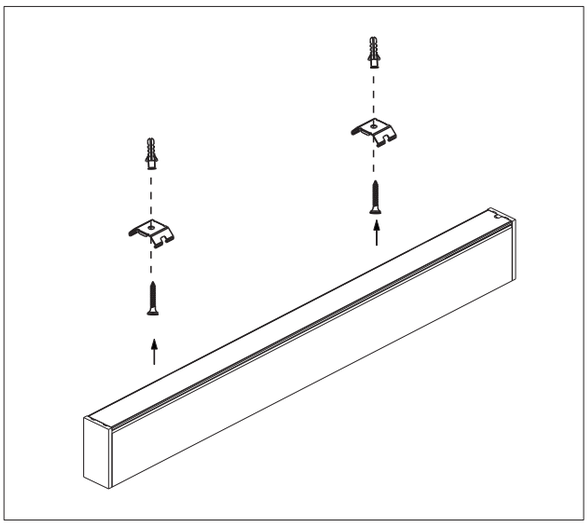

## B SUSPENDED INSTALLATION

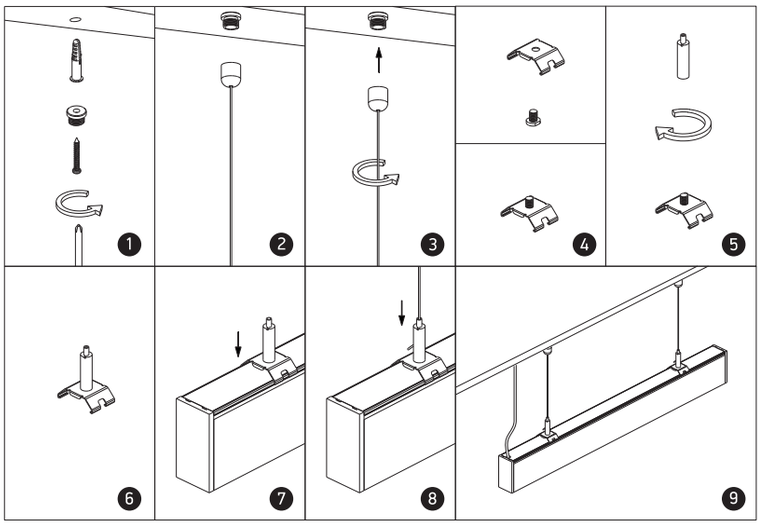


## C CONNECTION

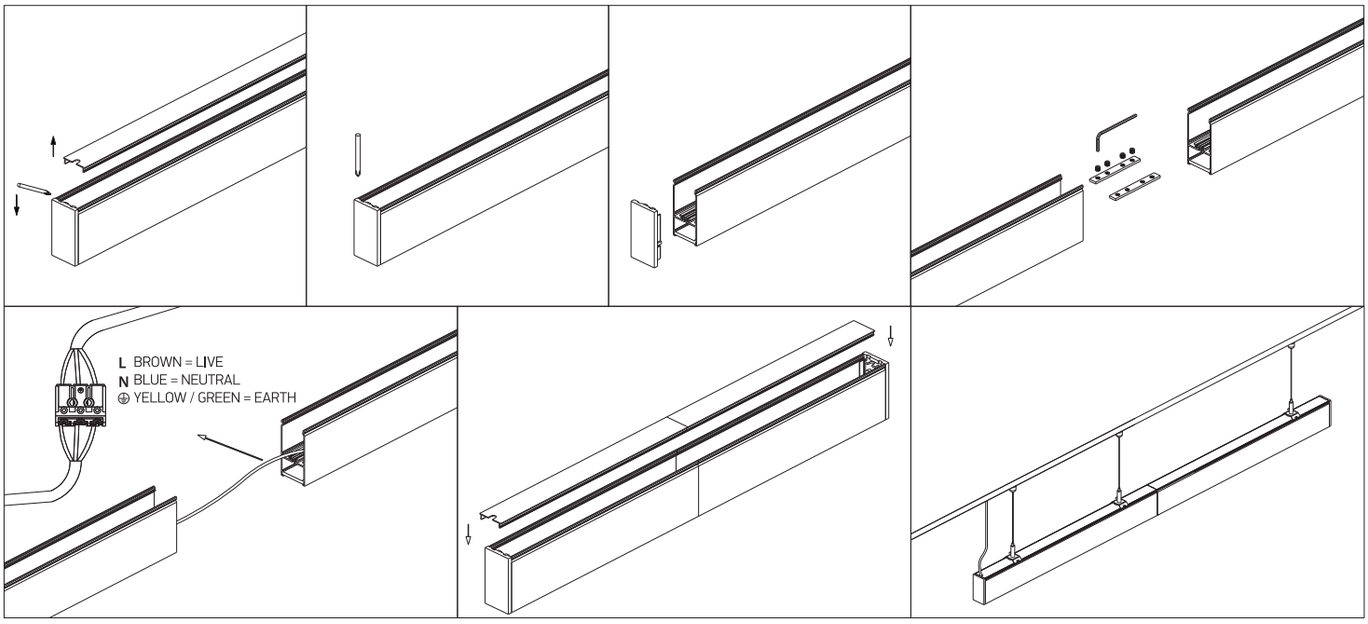


**Warnings:**

1. Make sure that the product is installed properly before connecting to electricity.
2. Do not cover the fitting.
3. Maintenance and installation should only be carried out by a professional electrician.

www.1-light.eu