INSTALLATION MANUAL

38150B

ecolight | UGR17 | 90 CRI | CE | RoHS COMPLIANT | NOT DIMMABLE

40W | SMD **3030** | **48**LEDs | **230**V | IP**20** | Aluminium

Complete with 1000mA driver / Can be connected in line.

one LIGHT

A SURFACE INSTALLATION

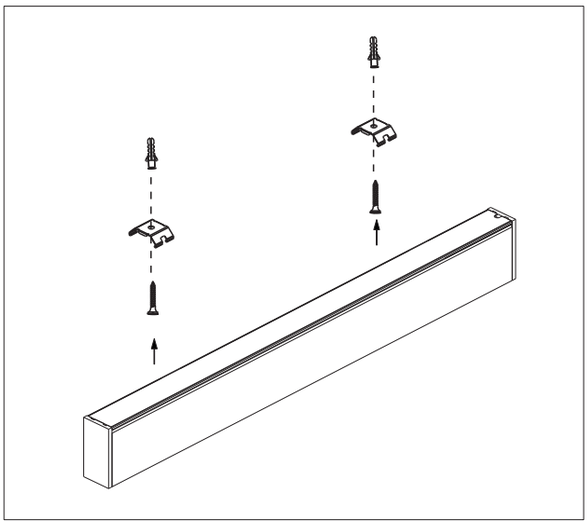

B SUSPENDED INSTALLATION

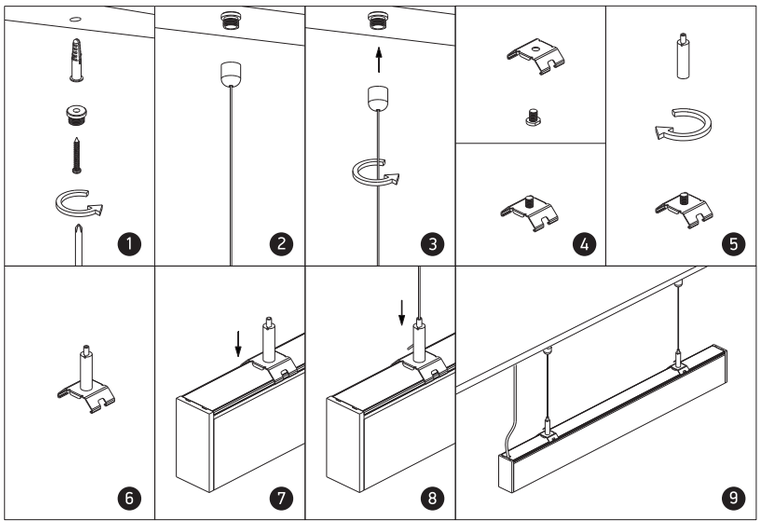

C CONNECTION

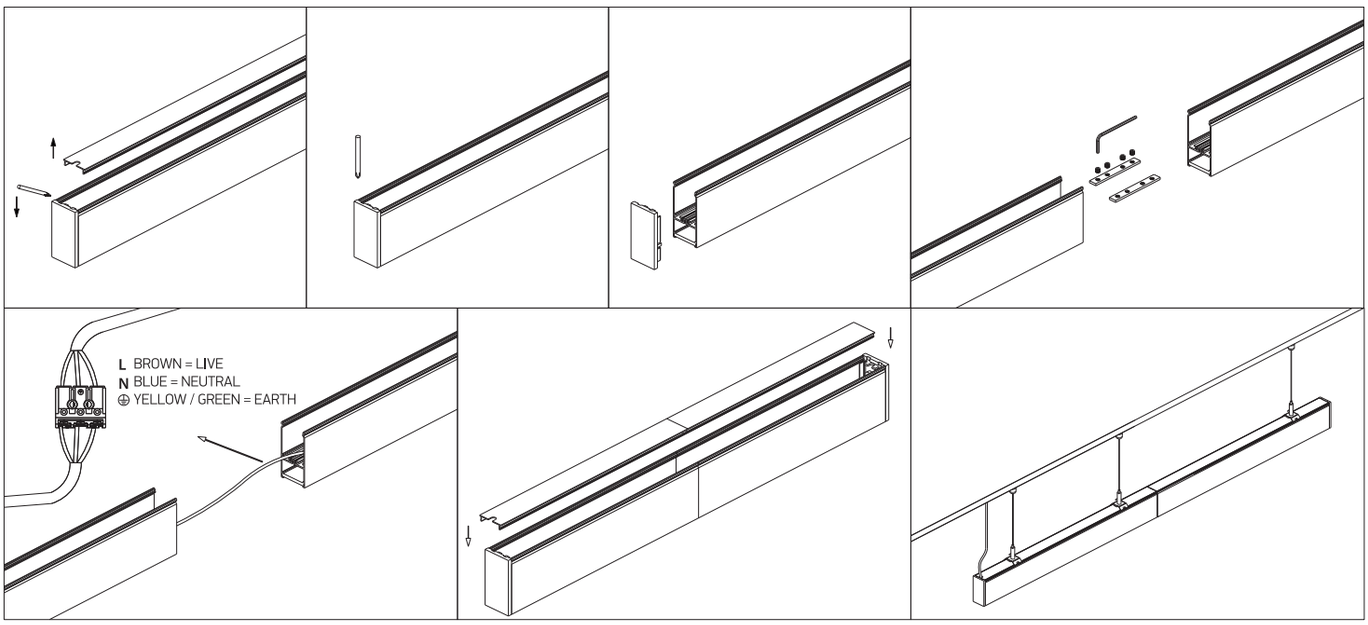

Warnings:

1. Make sure that the product is installed properly before connecting to electricity.
2. Do not cover the fitting.
3. Maintenance and installation should only be carried out by a professional electrician.

www.1-light.eu