INSTALLATION MANUAL

42114BL

LED BUILT IN | III | DALI DIMMABLE | ADJUSTABLE | DALI | CE | EAC | UK CA | RoHS COMPLIANT

24W | COB LED | 48V DC | IP20 | Aluminium | 90 CRI

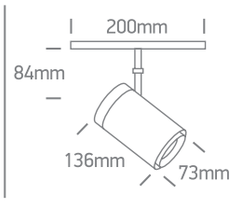

one LIGHT

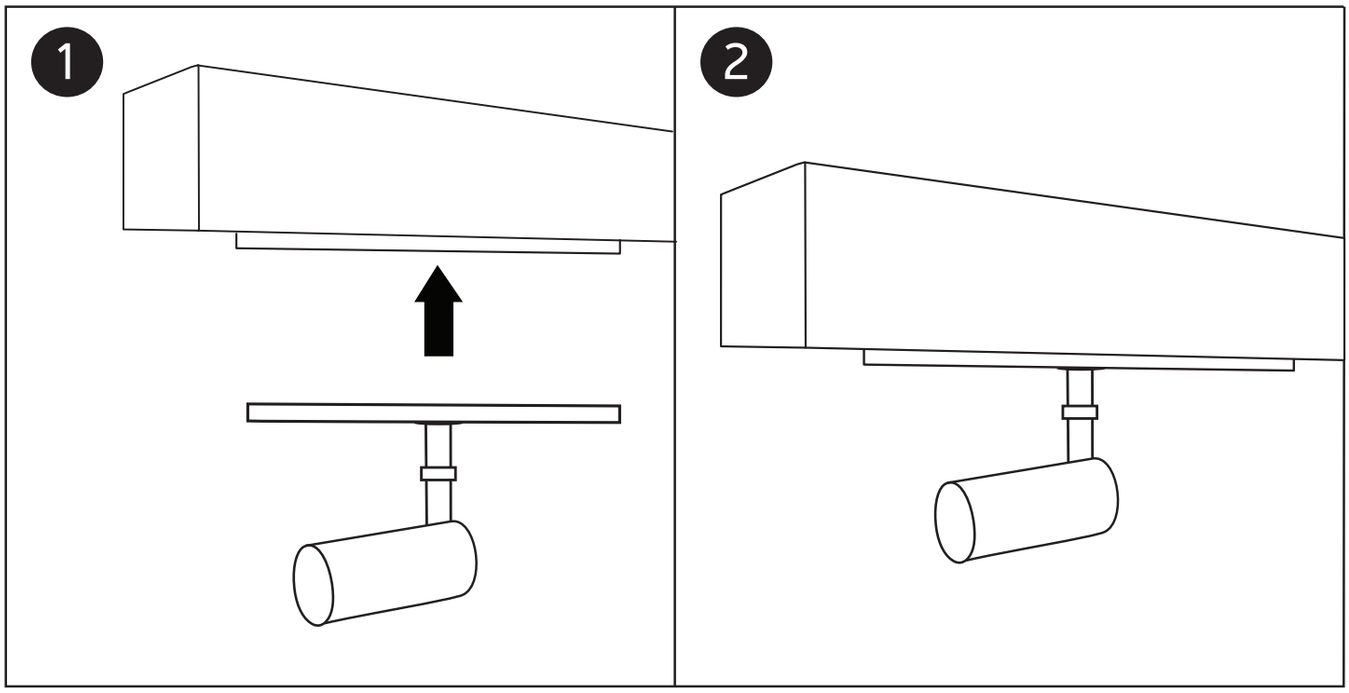

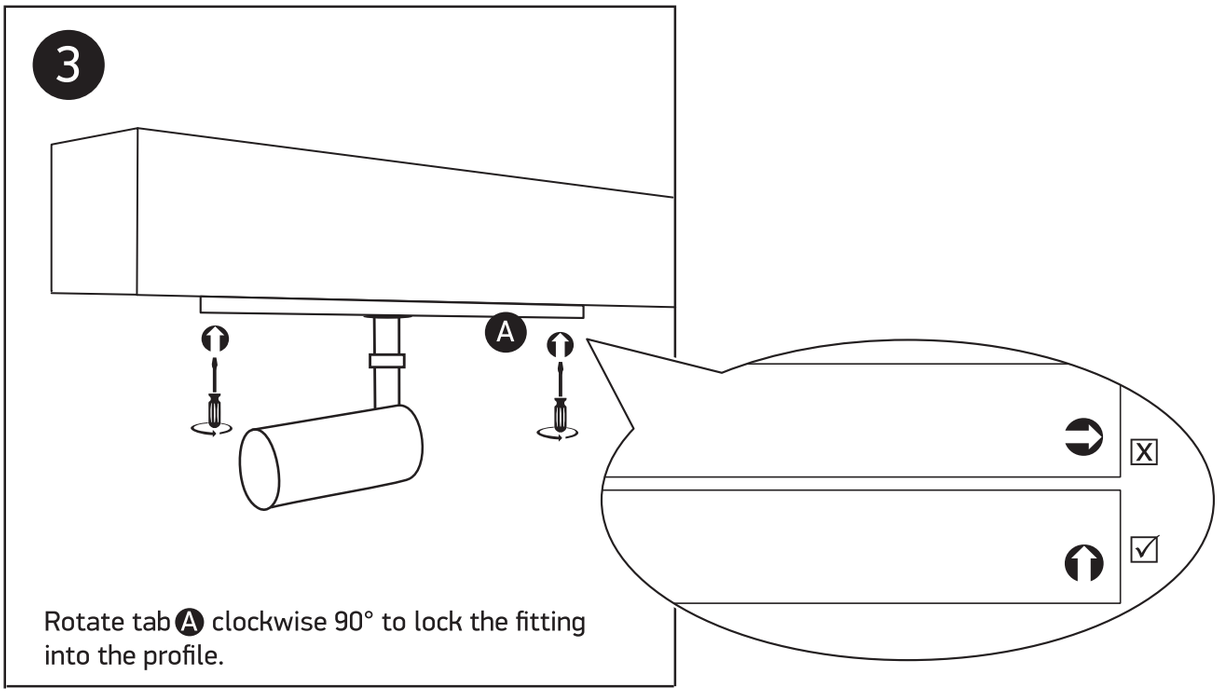

Warnings:

1. Make sure that the product is installed properly before connecting to electricity.
2. Do not cover the fitting.
3. Maintenance and installation should only be carried out by a professional electrician.

www.1-light.eu