INSTALLATION MANUAL

67386A

LED BUILT IN | DARK LIGHT | CCT V | CE EAC UKCA RoHS COMPLIANT | NOT DIMMABLE

230V | SMD LED | 1,5W | IP65 | ABS + PC | AC LED | 80 CRI

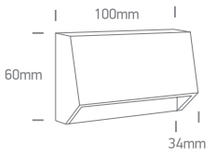

one LIGHT

A

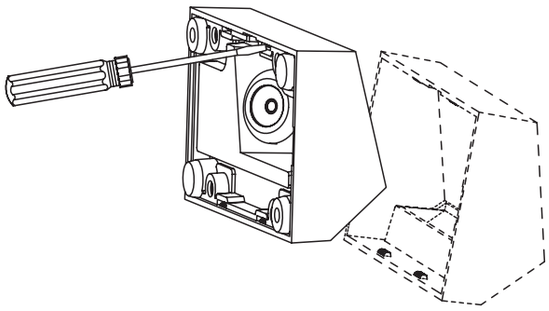

B

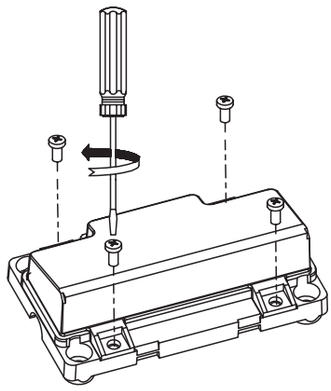

C

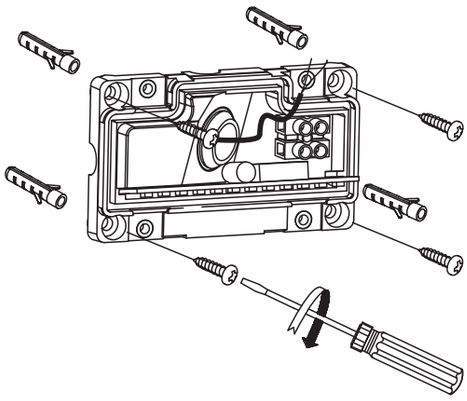

D

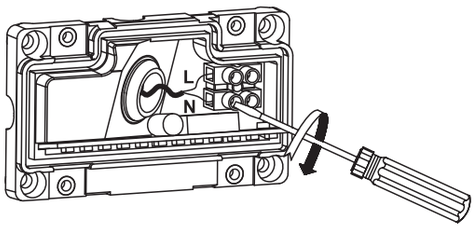

E

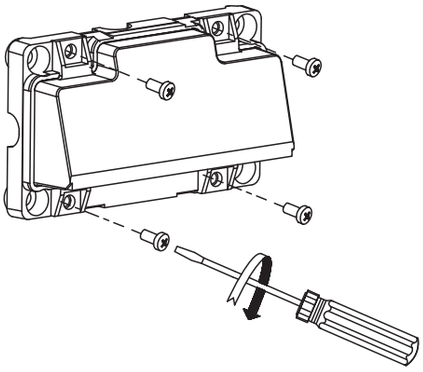

F

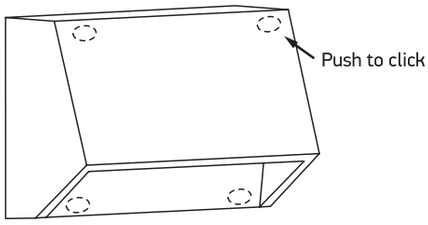

Warnings:

1. Make sure that the product is installed properly before connecting to electricity.
2. Do not cover the fitting.
3. Maintenance and installation should only be carried out by a professional electrician.

www.1-light.eu